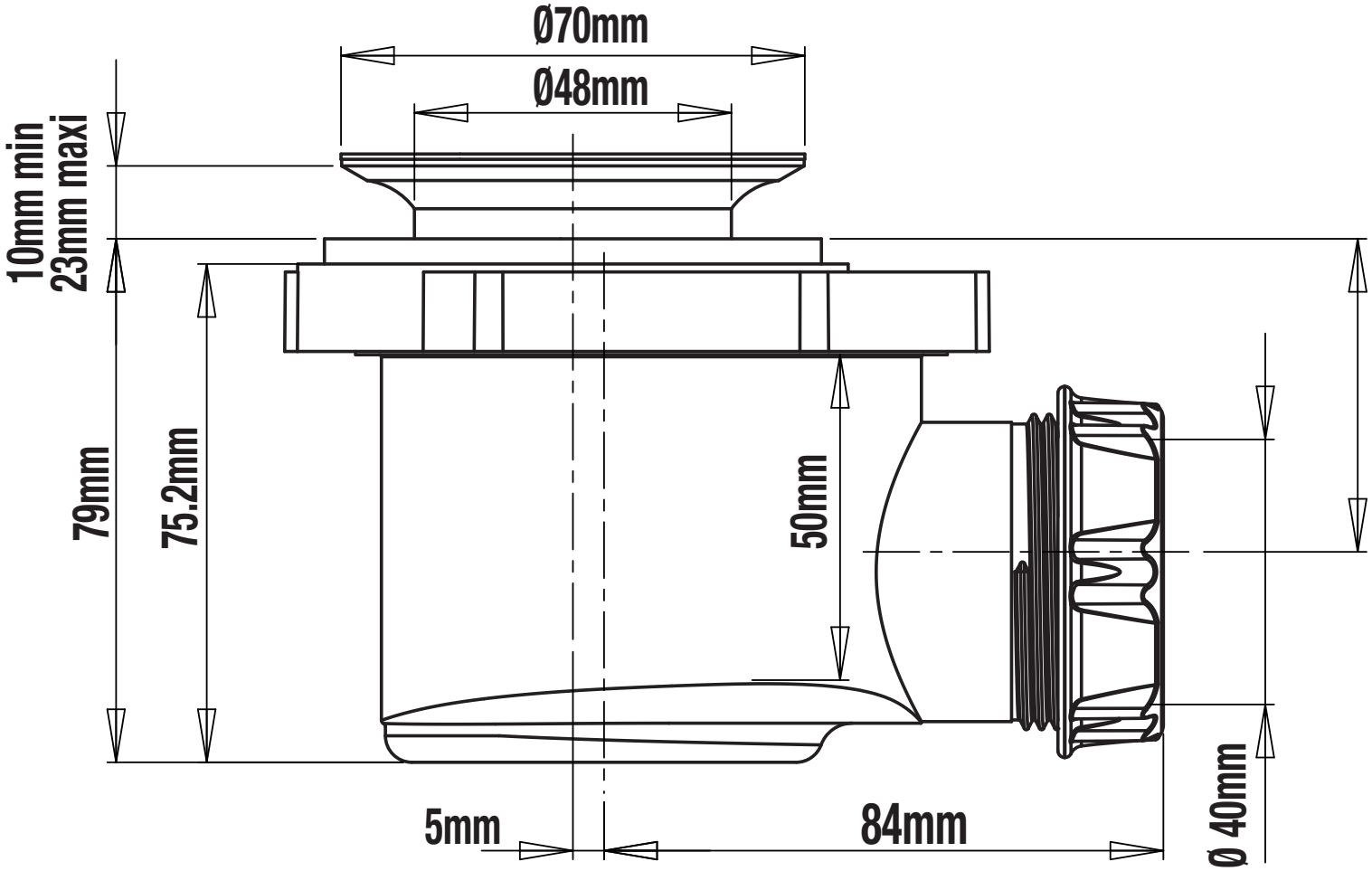
Ø70mm
Ø48mm
10mm min
23mm maxi
79mm
75.2mm
50mm
5mm
84mm
Ø 40mm